Parts List			
Item	Qty	Part Number	Description
1	1	MVE004	Filter
2	1	FC100	1" Flange Clamp
3	1	EV4100	1 1/4 Sec, 3 wire High Torque Assy
4	1	MEV220XR1	2" FP Manifold Valve Only

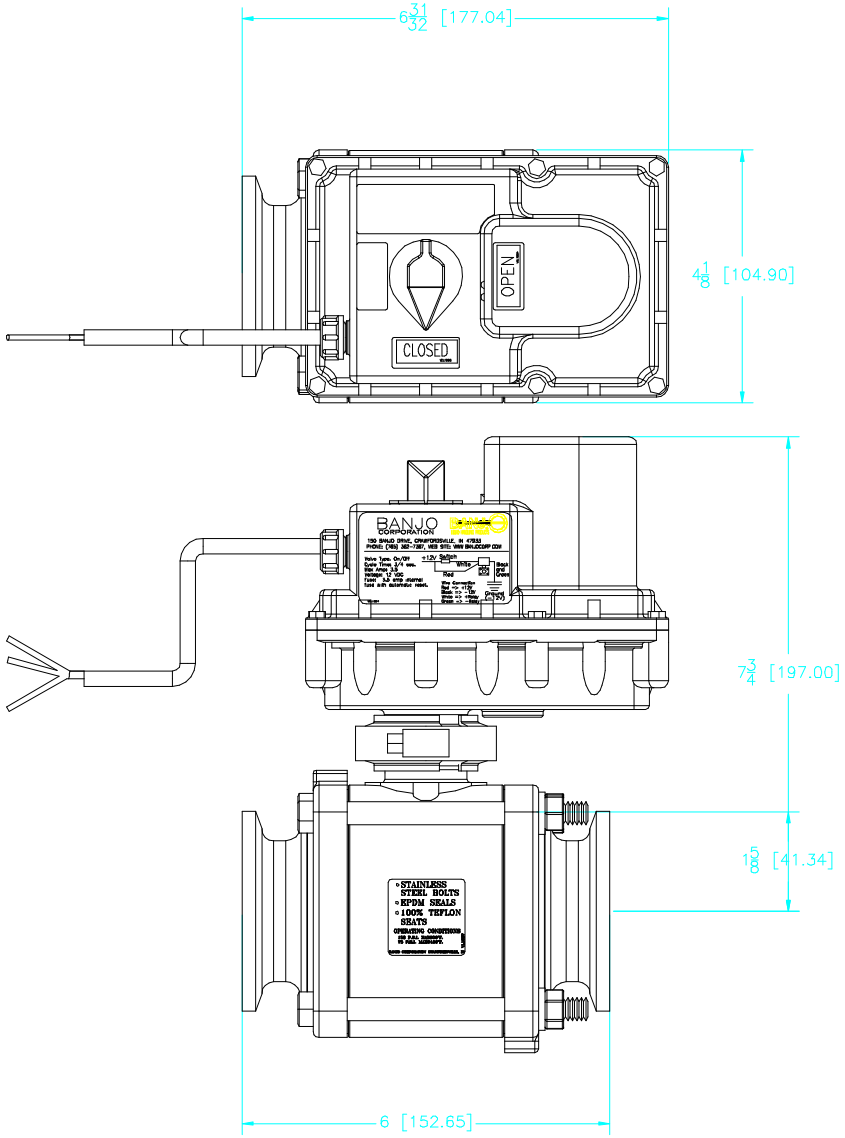

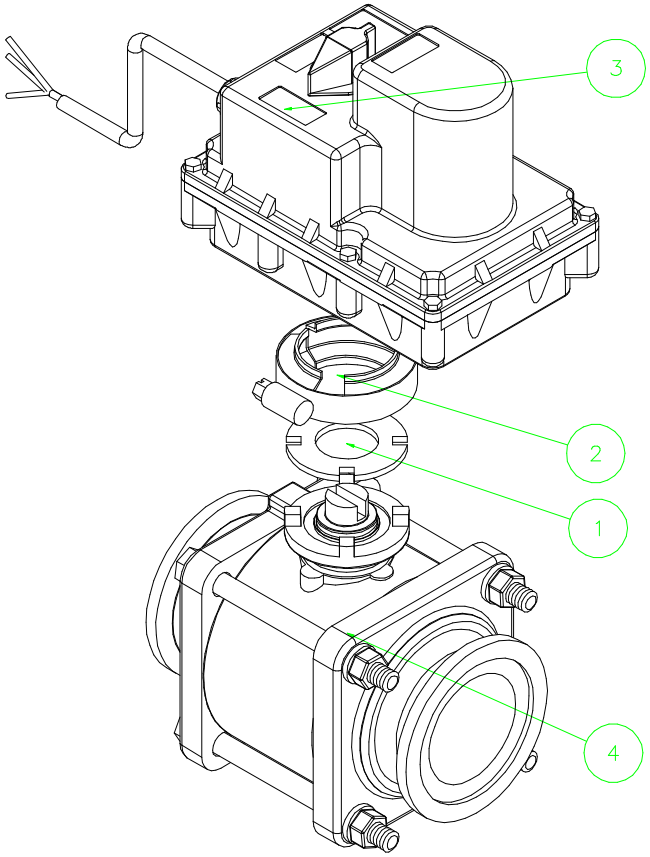

BANJO
LIQUID HANDLING PRODUCTS

BANJO CORPORATION
150 BANJO DR. * CRAWFORDSVILLE, IN 47933

PART NO.
MEV220CF

TITLE
2" FP Manifold Electric Valve 1 1/4 Sec, 3 Wire, On/Off

THIS DRAWING AND ALL INFORMATION CONTAINED THEREON ARE THE EXCLUSIVE PROPERTY OF BANJO CORPORATION. UNLESS SPECIFICALLY NOTED, THIS DRAWING AND ITEMS SHOWN ON THIS DRAWING ARE SUBJECT TO CHANGE AT ANY TIME.